Production support solutions

NPB Ergo Snake Wrap Loader

Designed to support safe and efficient handling of paper rolls on the production floor, this ergonomic loading tool simplifies roll positioning and manual handling tasks. By reducing physical strain and streamlining roll changes, it supports efficient daily operations and a more structured workflow.

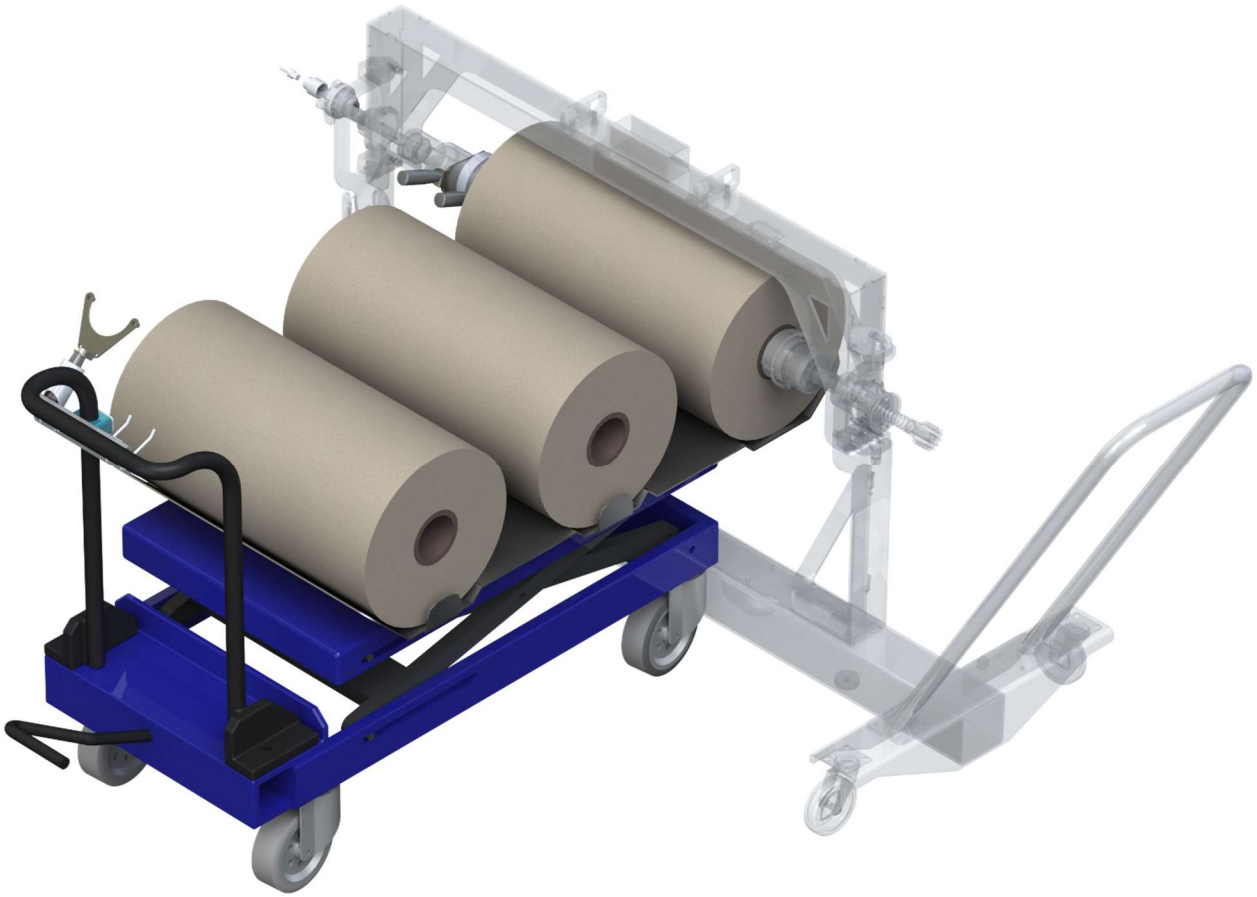

Supporting efficient daily operations

The NPB Ergo Snake Wrap Loader is a mobile workstation and handling tool developed to support controlled and easy handling when loading new paper rolls used in snake wrap palletizing into the snake wrap dispenser. Positioned close to where the work is performed, it enables quick and safe roll changes without the need for heavy manual lifting.

Smart and precise roll loading

Equipped with a hydraulic system, the NPB Ergo Snake Wrap Loader enables precise and controlled operation during roll handling. This allows rolls to be positioned accurately and handled in a stable manner throughout the loading process.

The solution also supports quick and secure loading of paper rolls into their dispensers, reducing handling time and making roll changes more efficient as part of daily operations.

By combining practical design with operator-focused ergonomics, the solution helps standardize work routines, reduce heavy lifts and movements, and improve overall efficiency on the production floor - supporting both productivity and improved work practices.

Key advantages on the production floor:

- **Reduced manual handling** - minimizes heavy lifting during roll changes.
- **Improved workflow efficiency** - mobile tool positioned close to the task reduces handling time.
- **Precise operation** - hydraulic system ensures controlled and accurate roll positioning.
- **Quick and secure loading** - enables fast and stable loading of rolls into their dispensers.

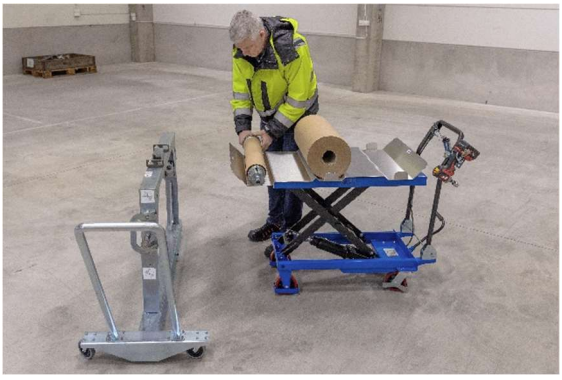

The height is easy to adjust for an ergonomic working position.

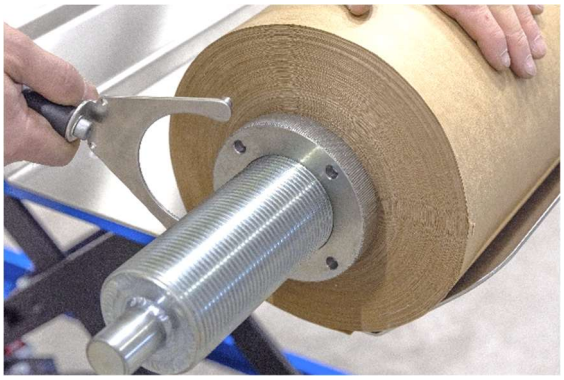

Torque arm for easier tightening of the roll.

Technical specification

Product data

Article no.: 12094120 (Kit)

NPB Ergo Snake Wrap Loader - Kit

1x Hydraulic lift cart.
1x Stainless steel roll support.
1x Holder for "screwdriver and torque arm", art.no. 1294.
2x Knobs with 22mm hexagonal attachment, art.no. 12094122.
1x 22mm socket with attachment for screwdriver
1x Torque arm, art.no. 12094130.
Screwdriver not included.

NPB designs, develops and manufactures automation equipment for the packaging industry. We have top-rate expertise in mechanics and design as well as thorough knowledge in the development and manufacturing of automation equipment. The organization is customer-oriented and flexible with the aim to deliver intelligent machines that are simple to handle.

NPB Automation AB
Industrigatan 14B
SE-553 02 Jönköping | Sweden
Phone +46 (0)36 290 76 00
info@npb.se
www.npb.se

Version: 1.0